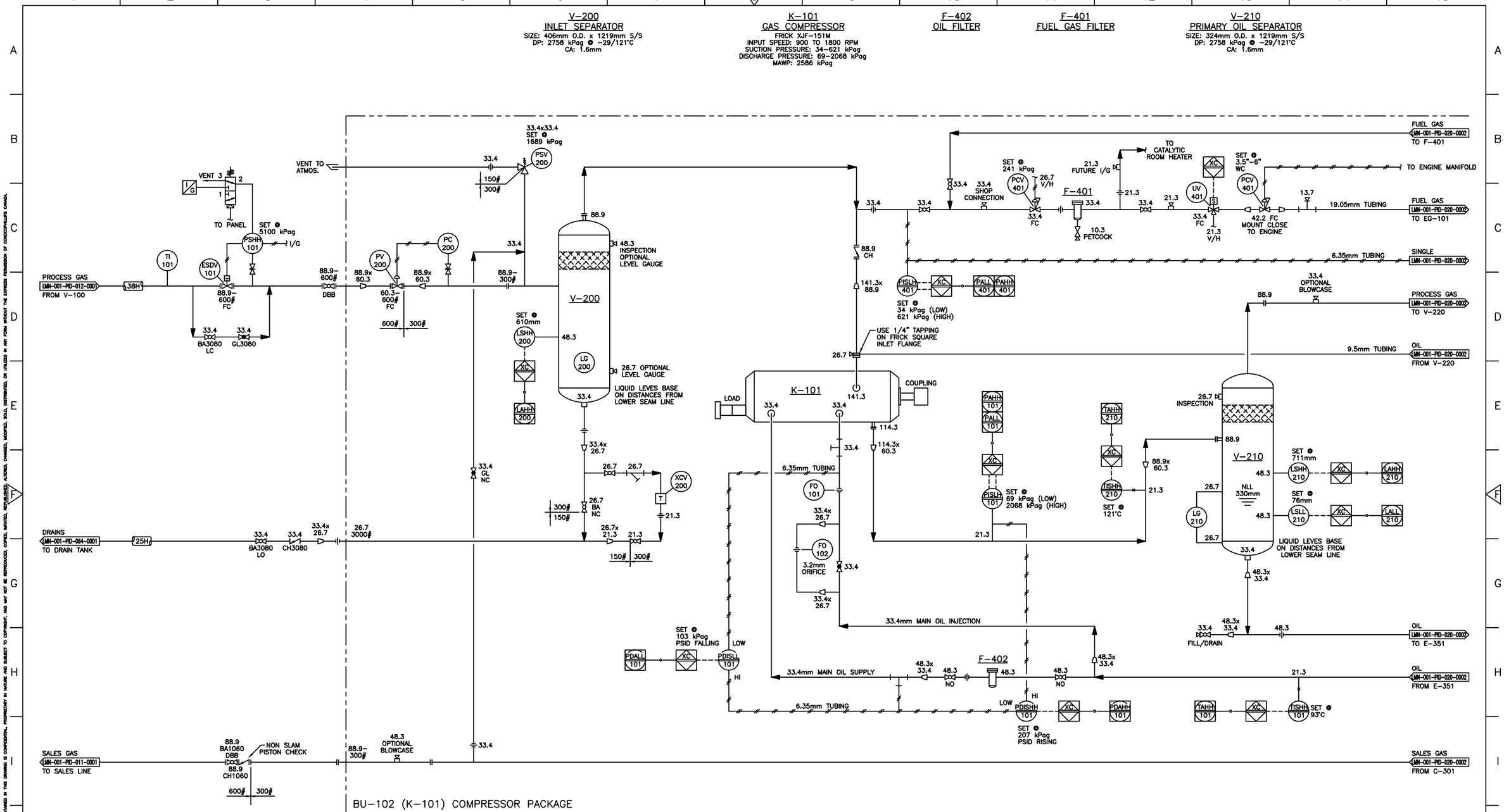

REFERENCE DRAWINGS	
DWG No.	TITLE

PROJECT VERSION (Clear cell info prior to returning to CPC)						
VER.	DATE	BY	CHK'D DFTG	CHK'D ENG	APP'D PM	VERSION ISSUE

REVISIONS						
REV.	DATE	BY	CHK'D DFTG	CHK'D ENG	APP'D PM	REVISION ISSUE
0	07/07/03	YD	–	DP	–	ISSUED FOR CONSTRUCTION (WBS# WVF.C07.2953)

ENGINEERING SEAL

PREPARED BY ConocoPhillips Canada

PERMIT

ConocoPhillips Canada

LEAMAN 10-29 COMPRESSOR STATION

90HP COMPRESSOR

PIPING AND INSTRUMENTATION DIAGRAM

LEGAL DESC. FROM: 10-29-056-11 W5M

LEGAL DESC. TO (IF APPL.):

LEGACY DWG NO.:

ENG. CO. PROJ. NO.:

SCALE: NTS

DATED: 07/05/09

CPC DWG. NO.: LMN-001-PID-020-0001

REV.: 0

THE INFORMATION AND DATA CONTAINED IN THIS DRAWING IS CONFIDENTIAL, PROPRIETARY IN NATURE AND SUBJECT TO COPYRIGHT, AND MAY NOT BE REPRODUCED, COPIED, INITIATED, REPUBLISHED, ALTERED, CHANGED, MODIFIED, SOLD, DISTRIBUTED, OR UTILIZED IN ANY FORM WITHOUT THE EXPRESS PERMISSION OF CONOCOPHILLIPS CANADA.